NERI

Project location:	Fixture type: Qty:
Project name:	Notes:

Heka | Litter bin | Cast iron + Steel | Single with bollard | Ashtray

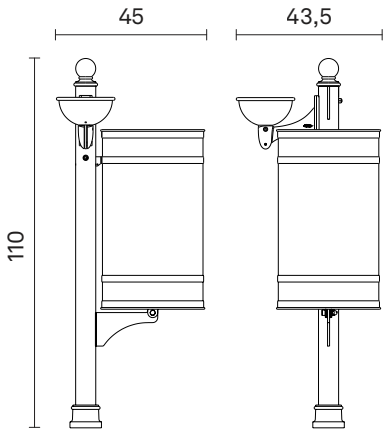

Ordering Information / Guide

Example**: HE22750002-N-MAC-AC037-Q045044110-CN0**

Material	Capacity	Dimensions	Finish
MAC Steel	**AC037** 9.774 gal	**Q045044110** L 17.717 - W 17.126 - H 43.307 in	**CN0** Grey [Neri] Textured

Generated code: **HE22750002 - N** - _ _ _ - _ _ _ _ _ _ - _ _ _ _ _ _ _ _ _ _ _ - _ _ _

Property of Neri S.p.A. - Reproduction and use for unauthorized purposes is prohibited.
Neri reserves the right to make changes to its products and documentation without prior notice.

Heka | Litter bin | Cast iron + Steel | Single with bollard | Ashtray

MECHANICAL CHARACTERISTICS

Material	Steel
Capacity	9.774 gal
Weight	32.63 lb
Finish	Grey [Neri] Textured

WARNINGS

Protection of surfaces: please refer to the specification on painting procedures of the materials.

Property of Neri S.p.A. - Reproduction and use for unauthorized purposes is prohibited.
Neri reserves the right to make changes to its products and documentation without prior notice.