NERI

Project location:	Fixture type: Qty:
Project name:	Notes:

Brenta Bollard | Luminaire | Brenta L

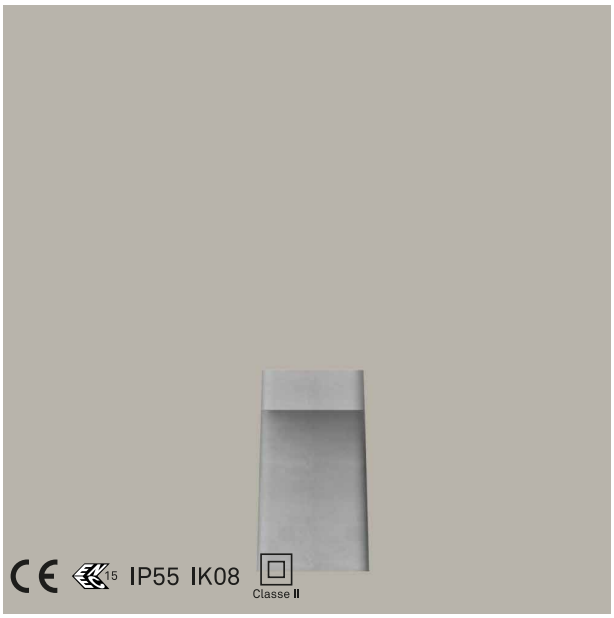

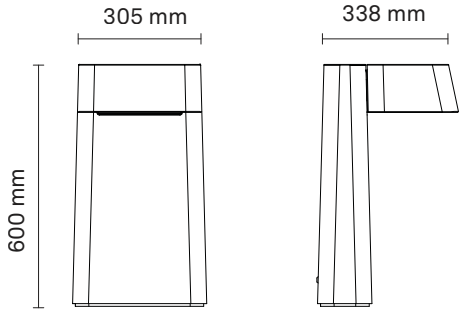

Ordering Information / Guide

Example**: BR2960003-N-D09-830-L013-SP-V1-F02-M2-CG0**

Optique	Ra+K	Luminous flux	Screen finish	Power supply	Driver Function	ISO Class	Finish
D09 Type IV	**830** Ra80 3000 K **840** Ra80 4000 K	**L013** 1300 lm **L014** 1400 lm	**SP** Prismatic	**V1** 220V-240V	**F02** 1-10V+CLO	**M2** Class II	**CG0** Grey [RAL 9006] Matt

Generated code: **BR2960003 - N** - _ _ _ - _ _ _ - _ _ _ _ - _ _ - _ _ - _ _ _ - _ _ - _ _ _

CONFIGURATION NOTES
The product features shown in this datasheet cannot always be freely combined.
To verify the configurations actually available and define the corresponding product code, please use the configurator available on our website.

Property of Neri S.p.A. - Reproduction and use for unauthorized purposes is prohibited.
Neri reserves the right to make changes to its products and documentation without prior notice.

Brenta Bollard | Luminaire | Brenta L

SOURCE

High-power LED matrix.

Energy-efficiency class	D, E
LED forward current	450 mA
Power rating	23 W
Nominal Flux	1300-1400 lm
Nominal CCT (Colour temperature)	3000 K, 4000 K
Color Rendering Index (Ra)	80
Standard Deviation Colour Matching	≤5
ANSI/IES TM-30	Rf = 84-85 Rg = 97-98
Rated lifetime	L80B10 100000 h @ Tq = 25 °C

LIGHTING CHARACTERISTICS

Modular 2x2 refractive lenses in PMMA.

Optique	Type IV
Optical efficiency	LOR = 100% ULOR = 0%
LED quantity	18
Cutoff Angle	Semi Cutoff C = 25° γ = 54°
Luminous flux	1300-1400 lm
Luminous efficacy	50-54 lm/W
Luminous intensity class	G*6
IPEA	Road E / D, Urban D / D, Ped E / D, Park E / D, Art D / C
BUG	B=0, U=0, G=1
Photobiological safety	RG1 - Low risk

ELECTRICAL CHARACTERISTICS

Compliant with standards EN 60598-1; EN 60598-2-3; EN 62031; EN 55015 EMC; EN 61547 EMC; EN 61000-3-2/3; IEC/TR 62778.
ENEC safety mark.

Luminaire power	26 W
Power supply	220V-240V~ 50/60Hz
Insulation class	Class II
Control type - driver	1-10V+CLO
Ambient temperature	-35 °C / +40 °C
Driver included	No

MECHANICAL CHARACTERISTICS

Structure made of NeriConcrete, an HPC (High Performance Concrete) with flexural strength (13 MPa) and compressive strength (75 MPa) according to EN 1015-11 at 28 days.
NeriConcrete is a flexible paste made by blending cement powders and components, polymer fibres, coloured pigments, and water, adaptable to any mould.
Protective screen in prismatic flat tempered glass (IK08 – EN 62262) with stainless steel fastening elements.
The surface treatment makes the material water-repellent and stain-resistant.

Length	338 mm
Width	305 mm
Height	600 mm
Weight	43 kg
Wind-exposed area	0.18 m²
Protection degree	IP55
Mechanical resistance	IK08
Finish	Grey [RAL 9006] Matt

WARNINGS

Luminaire designed for disposal/recycling at end-of-life.
Replaceable (LED only) light source by a professional.
Replaceable control gear by a professional.
Protection of surfaces: please refer to the specification on painting procedures of the materials.

Property of Neri S.p.A. - Reproduction and use for unauthorized purposes is prohibited.
Neri reserves the right to make changes to its products and documentation without prior notice.

Brenta Bollard | Luminaire | Brenta L

Optic: Type IV

Screen finish: Prismatic

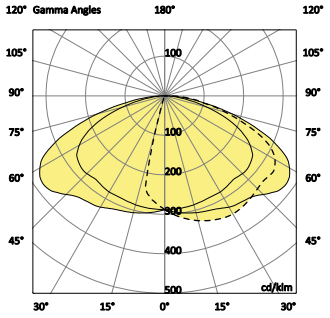

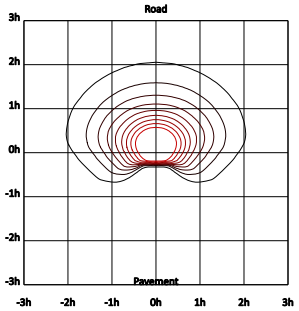

Property of Neri S.p.A. - Reproduction and use for unauthorized purposes is prohibited.
Neri reserves the right to make changes to its products and documentation without prior notice.

Brenta Bollard | Luminaire | Brenta L

Optic: Type IV

Screen finish: Prismatic

System					Source			IPEA				
Luminous Flux	**Nominal CCT**	**W**	**lm/W**	**n° led**	**mA**	**W**	**lm/W**	**Road**	**Urban**	**Ped**	**Park**	**Art**
1300 lm	3000 K	26	50	18	450	23	57	E	D	E	E	D
1400 lm	4000 K	26	54	18	450	23	61	D	D	D	D	C

Property of Neri S.p.A. - Reproduction and use for unauthorized purposes is prohibited.
Neri reserves the right to make changes to its products and documentation without prior notice.