NERI

Project location:	Fixture type: Qty:
Project name:	Notes:

LANTERNA 2D | LUMINAIRE | LANTERNA 2D

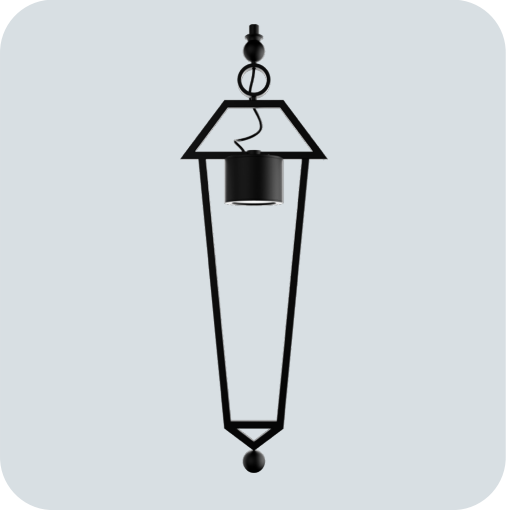

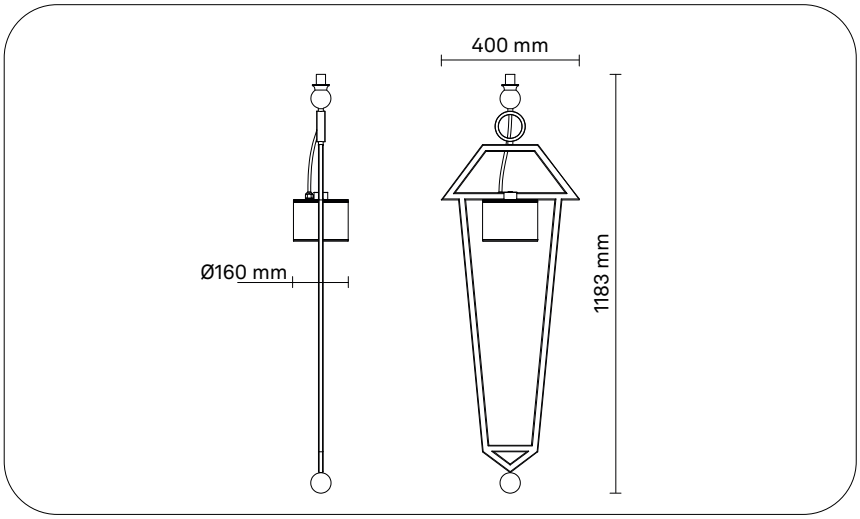

CE IP66 IK08 Classe II

ORDERING INFORMATION / GUIDE

Example: **LU2D01-N-D02-827-L045-SP-V1-F06-M2-CN0**

OPTIQUE	RA+K	LUMINOUS FLUX	SCREEN FINISH	POWER SUPPLY	DRIVER FUNCTION	ISO CLASS	FINISH
D02 Type II	**827** Ra80 2700 K	**L045** 4500 lm	**SP** Prismatic	**V1** 220V-240V	**F06** DALI+CLO	**M2** Class II	**CN0** Grey [Neri] Textured

Generated code: **LU2D01 - N** - _ _ _ - _ _ _ - _ _ _ _ - _ _ - _ _ - _ _ _ - _ _ - _ _ _

ON REQUEST
Non-standard variants and configurations available upon request. Please contact Neri for further information.

Property of Neri S.p.A. - Reproduction and use for unauthorized purposes is prohibited.
Neri reserves the right to make changes to its products and documentation without prior notice.

LANTERNA 2D | LUMINAIRE | LANTERNA 2D

SOURCE

COB LED.

Energy-efficiency class: D
LED forward current: 691 mA
Power rating: 34 W
Nominal Flux: 4500 lm
Nominal CCT (Colour temperature): 2700 K
Color Rendering Index (Ra): 80
Standard Deviation Colour Matching: ≤3

LIGHTING CHARACTERISTICS

Single silicone lens.

Optique: Type II
Optical efficiency: LOR = 100% ULOR = 0%
LED quantity: 1
Cutoff Angle: Semi Cutoff C = 10° γ = 50°
Luminous flux: 4500 lm
Luminous efficacy: 112 lm/W
Luminous intensity class: G*6
IPEA: Road A4+ / A4+, Urban A5+ / A5+, Ped A3+ / A3+, Park A3+ / A3+, Art A7+ / A7+
BUG: B=1, U=0, G=1
Photobiological safety: RG1 - Low risk

ELECTRICAL CHARACTERISTICS

Compliant with standards EN 60598-1; EN 60598-2-3; EN 62031; EN 55015 EMC; EN 61547 EMC; EN 61000-3-2/3; IEC/TR 62778.

Luminaire power: 40 W
Power supply: 220V-240V~ 50/60Hz
Power factor: ≥0.99
Insulation class: Class II
Control type - driver: DALI+CLO
Safe Flicker: PstLM=<1 e SVM=<0,4 (IEC TR 61547-1 e IEC TR 63158)
Ambient temperature: -35 °C / +50 °C
Driver included: Yes
Surge protection: 10kV CM - 6kV DM

MECHANICAL CHARACTERISTICS

Structure composed of a galvanized steel frame and a lighting module made of CNC-machined solid aluminum, with an integrated heat sink.
Protective screen in transparent prismatized tempered flat glass, IK08 impact resistant (EN 62262), available in an extra-clear version upon request.
Equipped with an osmotic valve for internal and external pressure balancing and supplied pre-wired.
Stainless steel screws.

Length: 400 mm
Width: 160 mm
Height: 1183 mm
Weight: 8 kg
Protection degree: IP66
Mechanical resistance: IK08
Finish: Grey [Neri] Textured

INSTALLATION

Suspended installation via G 3/4” male threaded connection.
Suspended: threaded connection G3/4”.

WARNINGS

Luminaire designed for disposal/recycling at end-of-life.
Replaceable (LED only) light source by a professional.
Replaceable control gear by a professional.
Protection of surfaces: please refer to the specification on painting procedures of the materials.

Property of Neri S.p.A. - Reproduction and use for unauthorized purposes is prohibited.
Neri reserves the right to make changes to its products and documentation without prior notice.

LANTERNA 2D | LUMINAIRE | LANTERNA 2D

Optic: Type II

Screen finish: Prismatic

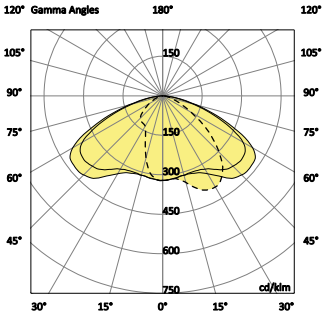

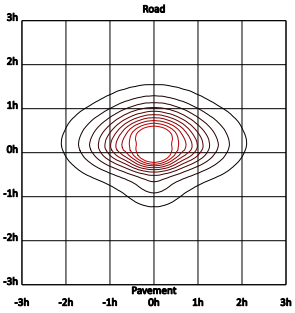

Property of Neri S.p.A. - Reproduction and use for unauthorized purposes is prohibited.
Neri reserves the right to make changes to its products and documentation without prior notice.

LANTERNA 2D | LUMINAIRE | LANTERNA 2D

Optic: Type II

Screen finish: Prismatic

System					Source			IPEA				
Luminous Flux	**Nominal CCT**	**W**	**lm/W**	**n° led**	**mA**	**W**	**lm/W**	**Road**	**Urban**	**Ped**	**Park**	**Art**
4500 lm	2700 K	40	112	1	691	34	132	A4+	A5+	A3+	A3+	A7+

Property of Neri S.p.A. - Reproduction and use for unauthorized purposes is prohibited.
Neri reserves the right to make changes to its products and documentation without prior notice.