Sheliak | Pole | Cast iron | Small | Max 3 light sources

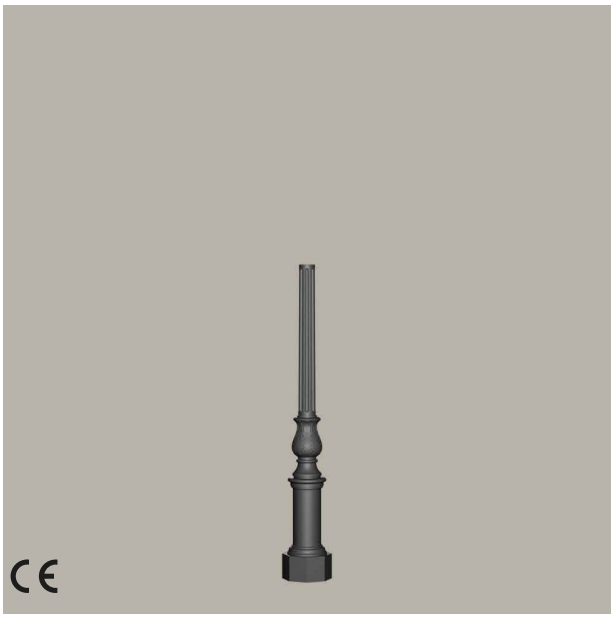

Ordering Information / Guide

Example: **SH1151000-N-BM-EPD-GF1-HC0318-ZD114060-CN0**

Ground fixing	Shape	Top Set up / Light points	Height	Section	Finish
BM Buried root **BF** Flanged	**EPD** Decorated	**GC3** Bracket post top entry | Max 3 light sources **GE2** Suspended swan neck | Max 2 light sources **GF1** Post top | Max 1 light source	**HC0318** 3180 mm **HC0367** 3670 mm	**ZD114060** Base 114 - Top 60 mm	**CN0** Grey [Neri] Textured

Generated code: **SH1151000 - N** - _ _ - _ _ _ - _ _ _ - _ _ _ - _ _ _ _ _ _ - _ _ _ _ _ _ _ _ - _ _ _

CONFIGURATION NOTES
The product features shown in this datasheet cannot always be freely combined.
To verify the configurations actually available and define the corresponding product code, please use the configurator available on our website.

Property of Neri S.p.A. - Reproduction and use for unauthorized purposes is prohibited.
Neri reserves the right to make changes to its products and documentation without prior notice.

Sheliak | Pole | Cast iron | Small | Max 3 light sources

MECHANICAL CHARACTERISTICS

Modular pole made of cast iron UNI EN 1561 with internal steel core
UNI EN 10219-1, hot-dip galvanized according to UNI EN ISO 1461.
CE-certified pole, compliant with standard UNI EN 40-5.

Section	Base/Top 114/60 mm
Hatch size	132x38 mm
Height under ground	600 mm
Slot height below ground line for cable entry	150x50 mm
Weight	81-89.9 kg
Finish	Grey [Neri] Textured

WARNINGS

Protection of surfaces: please refer to the specification on painting procedures of the materials.

Property of Neri S.p.A. - Reproduction and use for unauthorized purposes is prohibited.
Neri reserves the right to make changes to its products and documentation without prior notice.