NERI

Project location:	Fixture type: Qty:
Project name:	Notes:

Nebula | Stool | Steel + WPC | With backrest

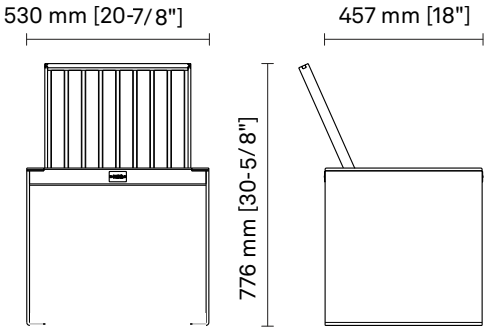

Ordering Information / Guide

Example**: STNEB01-N-MAW-ASC-Q053046078-CN2**

Material	Backrest	Dimensions	Finish
MAW Steel + WPC	**ASC** With backrest	**Q053046078** L 530 - W 457 - H 776 mm	**CN2** Grey [Neri] Textured + Neri Grey WPC **CN3** Grey [Neri] Textured + WPC Wood

Generated code: **STNEB01 - N** - _ _ _ - _ _ _ - _ _ _ - _ _ _ _ _ _ _ _ _ _ _ - _ _ _

Property of Neri S.p.A. - Reproduction and use for unauthorized purposes is prohibited.
Neri reserves the right to make changes to its products and documentation without prior notice.

Nebula | Stool | Steel + WPC | With backrest

Bench composed of painted steel supports.
Seat made of 100% ReMade in Italy® certified regenerable WPC.

MECHANICAL CHARACTERISTICS

Material	Steel + WPC
Backrest	With backrest
Weight	52 kg
Finish	Grey [Neri] Textured + Neri Grey WPC, Grey [Neri] Textured + WPC Wood

WARNINGS

Protection of surfaces: please refer to the specification on painting procedures of the materials.

Property of Neri S.p.A. - Reproduction and use for unauthorized purposes is prohibited.
Neri reserves the right to make changes to its products and documentation without prior notice.