NERI

Project location:	Fixture type: Qty:
Project name:	Notes:

Heka | Litter bin | Cast iron + Steel | Single with bollard | Cover

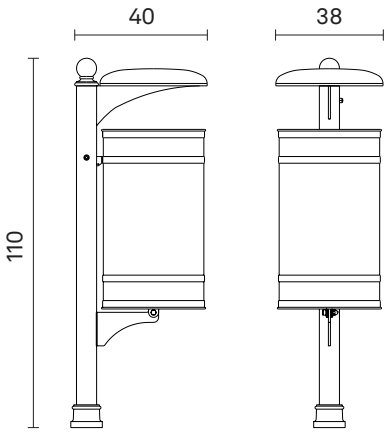

Ordering Information / Guide

Example: **HE22750010-N-MAC-AC037-Q040031110-CN0**

Material	Capacity	Dimensions	Finish
MAC Steel	**AC037** 9.774 gal	**Q040031110** L 15.748 - W 12.205 - H 43.307 in	**CN0** Grey [Neri] Textured

Generated code: **HE22750010 - N** - _ _ _ - _ _ _ _ _ _ - _ _ _ _ _ _ _ _ _ _ _ - _ _ _

Property of Neri S.p.A. - Reproduction and use for unauthorized purposes is prohibited.
Neri reserves the right to make changes to its products and documentation without prior notice.

Heka | Litter bin | Cast iron + Steel | Single with bollard | Cover

MECHANICAL CHARACTERISTICS

Material	Steel
Capacity	9.774 gal
Weight	47.62 lb
Finish	Grey [Neri] Textured

WARNINGS

Protection of surfaces: please refer to the specification on painting procedures of the materials.

Property of Neri S.p.A. - Reproduction and use for unauthorized purposes is prohibited.
Neri reserves the right to make changes to its products and documentation without prior notice.