NERI

Project location:	Fixture type: Qty:
Project name:	Notes:

Pictor | Litter bin | Steel | 120 L | With lid + ashtray

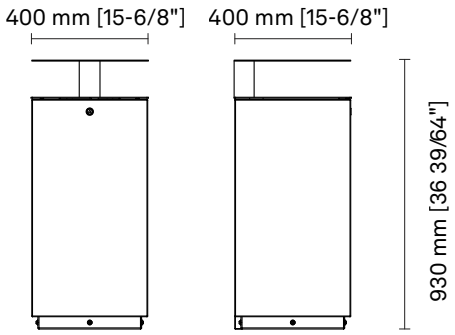

Ordering Information / Guide

Example**: LBPIC04-N-MAC-AC120-Q040040093-CN0**

Material	Capacity	Dimensions	Finish
MAC Steel	**AC120** 120 L	**Q040040093** L 400 - W 400 - H 930 mm	**CN0** Grey [Neri] Textured

Generated code: **LBPIC04 - N** - _ _ _ - _ _ _ _ _ _ - _ _ _ _ _ _ _ _ _ _ _ - _ _ _

Property of Neri S.p.A. - Reproduction and use for unauthorized purposes is prohibited.
Neri reserves the right to make changes to its products and documentation without prior notice.

Pictor | Litter bin | Steel | 120 L | With lid + ashtray

Square-base litter bin in painted stainless steel.
Reducer with hinge-based closure via a lock.
Internal bag holder in stainless steel with hinge and elastic band to facilitate attachment and removal.

MECHANICAL CHARACTERISTICS

Material	Steel
Capacity	120 L
Weight	30 kg
Finish	Grey [Neri] Textured

WARNINGS

Protection of surfaces: please refer to the specification on painting procedures of the materials.

Property of Neri S.p.A. - Reproduction and use for unauthorized purposes is prohibited.
Neri reserves the right to make changes to its products and documentation without prior notice.