Use
Suitable support for suspended light fixtures.

Materials
Made in UNI EN 1561 cast iron, UNI EN 1563 nodular cast iron and S235J UNI EN 10219-1 steel, hot dip galvanized according to UNI EN ISO 1461.
Screws in stainless steel.

Description
The top section is made up of the following elements:
1°) A hot-galvanised steel tube height 226.5 cm (Ø 6.0 cm) for the coupling on the posts with 10.2 cm of diameter; it is provided of a flange (A - Ø 7.5 cm) and holes (Ø 2.0 cm) for the passage of power supply cable (F).
2°) Cast iron junction cast in a single piece, height 11.5 cm.
3°) A ring in hot-galvanised steel for lower support of the suspension brackets. It is secured to the supporting tube (1°) with two M8 grubs.
4°) A ring in hot-galvanised steel for upper support of the suspension brackets. The ring has four holes (B - Ø 1.8 cm) for the passage of power supply cable. It is secured to the supporting tube (1°) with two M8 grubs.
5°) Two suspension brackets, each height 160 cm, with a protrusion of 120 cm. Structurally each bracket is composed of a tube in steel (Ø 4.2 cm), decorations (D, E) in cast iron and support attachments (C) in spheroidal cast iron. The entire assembly is hot galvanised. The brackets are arranged at 180° to each other and fixed to the support rings 3°- 4° with four M8 screws. At the end of each suspension bracket there is a connection (F) in cast iron with internal thread G3/4'' for attaching the light fixture. The power cables pass inside each suspension brackets (G).
6°) A terminal element in cast iron height 20 cm fixed onto element (1°) and is secured with a M8 screws (H).

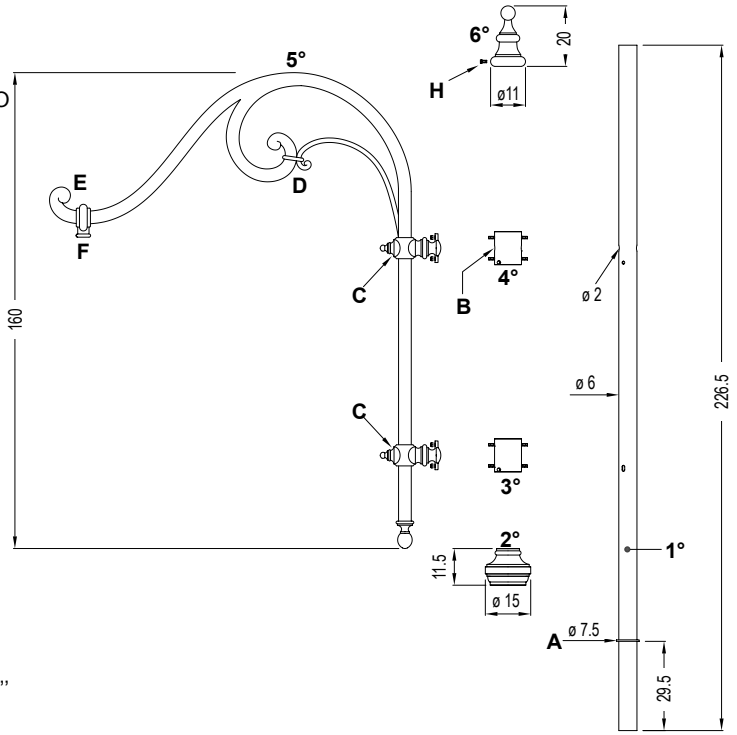

Exploded

Dimensions and weight
Height 212 cm; width 120 cm.
Weight 74 kg.

Protection of surfaces
Please refer to the specification on painting procedures of the materials.

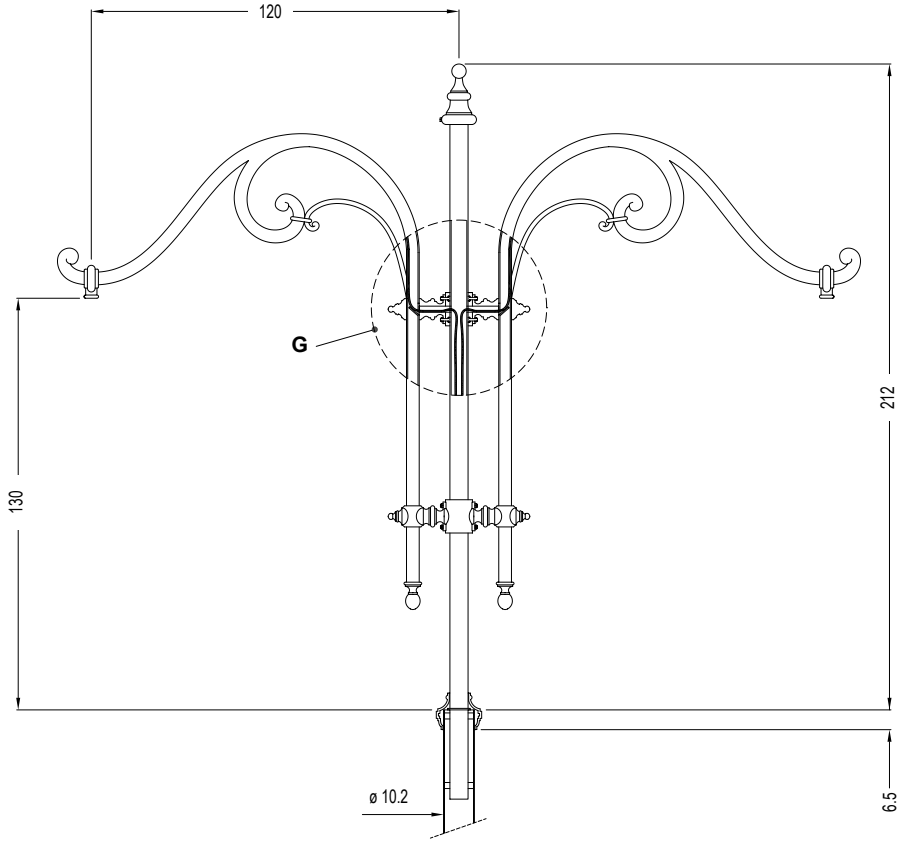

Section - Elevation view

NB: The measurements are in millimeters.

Neri S.p.A. Property - Any reproduction and use for its own purposes is forbidden.